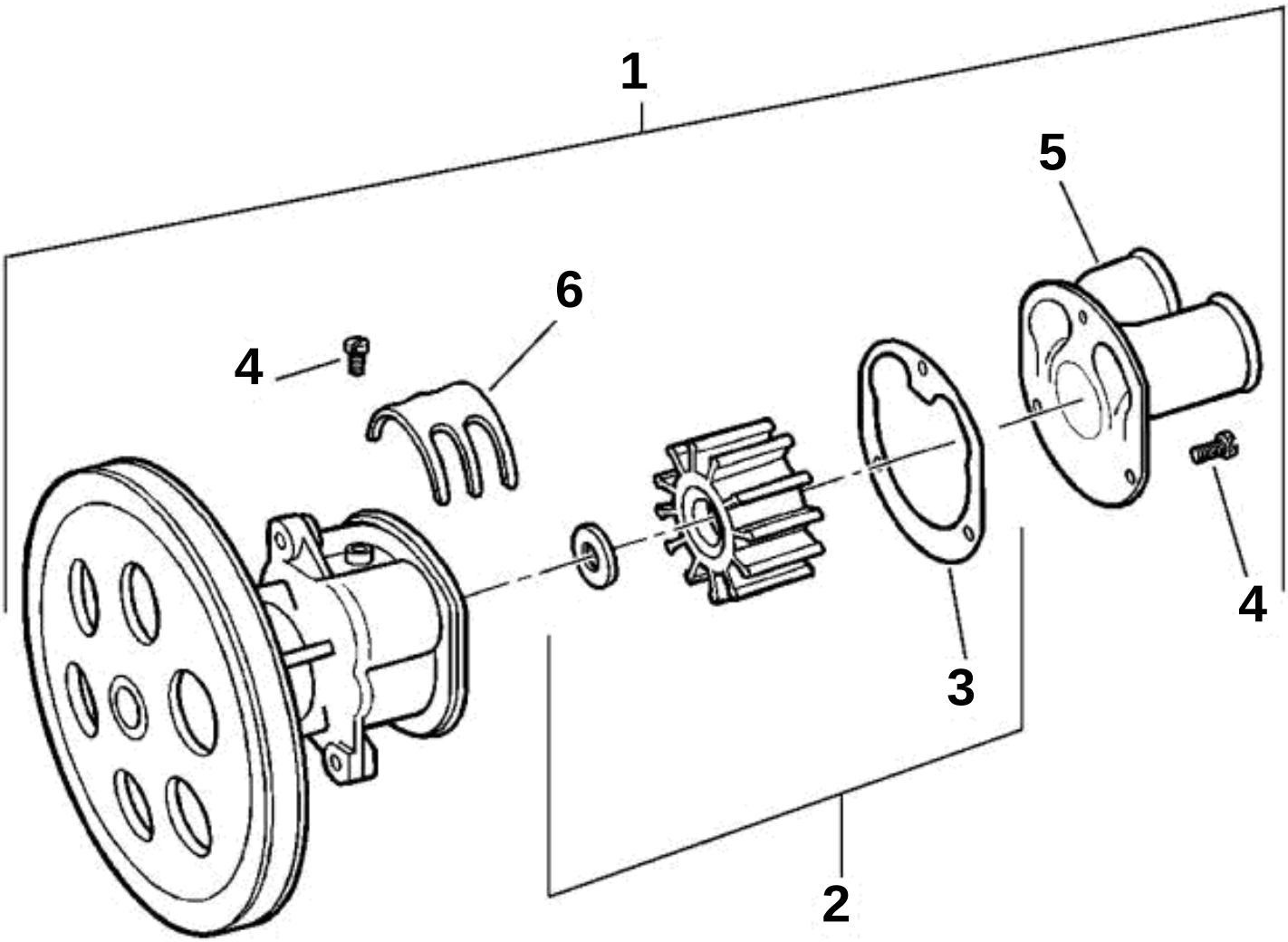
1
5
6
4
4
3
2

# WATER PUMP

| REF | PART NO. | QTY | DESCRIPTION | SEE SEC. | NOTES |
|---|---|---|---|---|---|
| 1 | 3857794 | 1 | Sea water pump | | |
| 2 | 3856039 | 1 | · Impeller kit | | |
| | | | · Bulletin P-26-6-2 | P-26-6-2-EN | Impeller kits |
| 3 | 3855782 | 1 | · · Gasket, Plate to body | | |
| 4 | 841693 | 4 | · Screw, Cam to housing | | |
| 5 | 3851697 | 1 | · End cover | | |
| 6 | 3858086 | 1 | · Pump cam, Impeller | | |